IP–Mole IP 95 ZK (short build design) Racheta de subtraversare IP 95 ZK (versiunea scurta)

2 - carcasa
3 - piston
4 - supapa de control
6 - suport exterior manson
7 - amortizor
8 - supapa cu clapeta
10 - arc
12 - siguranta tip Seger
14 - suport posterior filetat
15 - piulita / niplu fixare furtun
16 - furtun cu cuplaje
17 - cap taietor
18 - piulita blocare
19 - cap protector filetat
22 - craboti schimbare sens
101 - varf de spargere
330 - cheie pentru piulita
401 - tubul supapei de control
402 - manson de control
403 - supapa de control din cauciuc
1001 - distantier arc

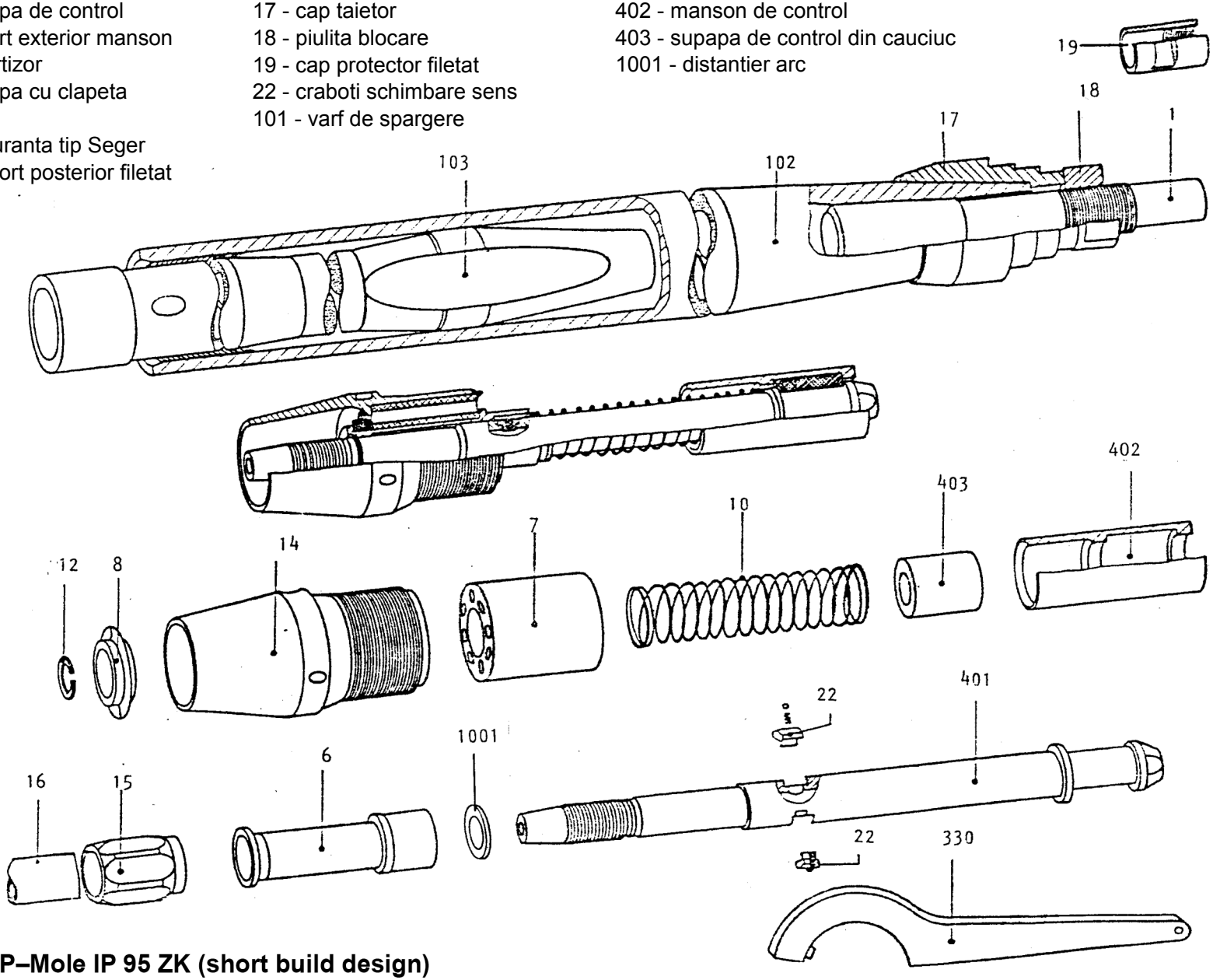

Essig IP–Mole IP 95 ZK (short build design)

Made in Germany by Fa. H. Jürgen Essig, Industrielle Anlagen GmbH & Co. KG • Gänsekamp 35 • 32457 Porta–Westfalica • Fon - 49 - 5 71 - 7 20 90
Distributed in Romania by GEPETTO CONSULT Brasov, Tel. 0730 188 888, Fax 0268 / 477983, E-mail: info@gp2.ro, web www.gepetto-consult.ro